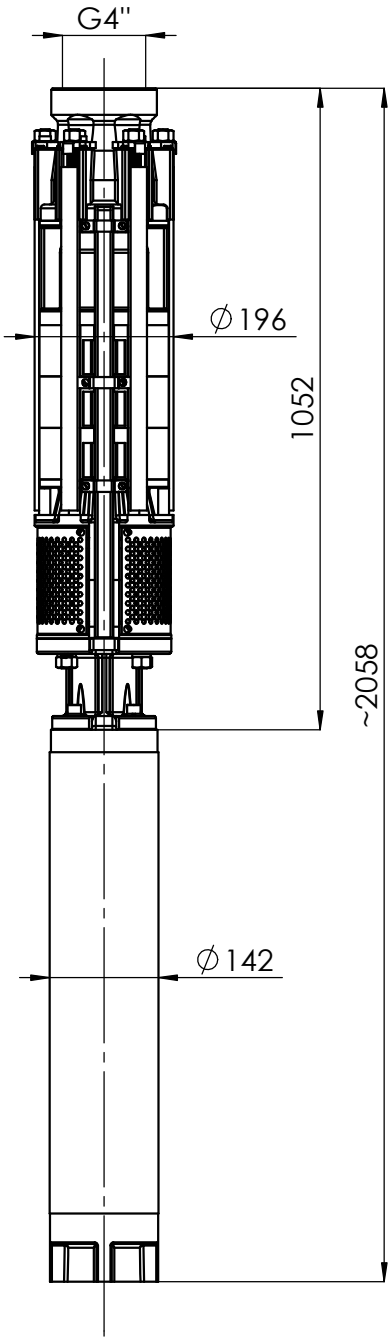


| | | |
|---|---|---|
| masa/weight/вес: ~151kg | 6" | HYDRO-VACUUM S.A.<br>GRUDZIĄDZ<br>ul. Droga Jeziorna 8 |
| GCA.5.06.2120_6_22kW | 22kW | |
| | 400/500V | |